IMER ACCESS
AERIAL PLATFORMS

WWW.IMERUSA.COM

POWERED
ACCESS LINE

ELECTRIC SCISSORS AND ARTICULATED & TELESCOPIC TRACKED PLATFORMS

TOLL FREE: **866.889.1272**
uniforcedistribution.com

IMER GROUP
TOGETHER **WE BUILD**

IMER USA, Inc.
221 West Hampton Place
Capitol Heights, MD 20743
Tel. (800) 275-5463
Fax (301) 336-6687

IMER West
3193 Diablo Avenue
Hayward, CA 94545

www.imerusa.com

Due to our ongoing Research and Development efforts these products and their specifications are subject to change without notice.

The California Office of Environmental Health Hazard Assessment Requires this Specific Warning: Cancer and Reproductive Harm - www.p65warnings.ca.gov

IMER GROUP | IMER ACCESS

IMER Group is an Italian company founded in 1962, a European leading manufacturer of construction machinery and equipment.

For over 50 years our mission is to provide the construction site professionals with the highest quality products which reduce operator fatigue and yield higher performance.

The IMER product range covers all the construction site's needs: from production, laying and transport of mortar and concrete to the cutting of materials and surfaces to elevating people and also to earthmoving.

IMER Access, the IMER Group's Access Platforms Division, manages the self-propelled aerial platforms lines for both scissor and articulated boom platforms, and the crawler access platform line.

The IMER Access production plant – with a footprint of almost 4 acres, of which over 50,000 square feet is indoor - is located in Pegognaga (Mantua).

The wide product range is a direct result of years of experience and specific research in the sector acquired in the most selective worldwide markets. The possibility to customize the specific equipment of each product category allows us to focus on the market, through the constant improvement of products and processes.

CONTENTS

IMER Group 3
IM Scissors 4
IM 47 8
IM 35 10
IM 32 12
IM R Series 14
IM R 19 16
IM R 13 T 18

We build partnerships and collaborations all over the world.

TCIA VOICE OF TREE CARE
November 7 - 9, 2019
Pittsburgh, Pennsylvania

WORLD OF CONCRETE
February 3 - 7, 2020
Las Vegas, Nevada

ARA Associate Member
February 9 - 10, 2020
Orlando, Florida

NPCA MEMBER
March 5 - 7, 2020
Fort Worth, Texas

ELECTRIC POWERED

SERIES IM SCISSOR LIFTS

IMER's Electric Scissor Lifts lead the industry with innovative technologies as a direct result of years of experience, concentrated research, and a goal to provide superior products that deliver unparalleled productivity and safety.

The IMER IM Series includes five models of scissors which all fill a unique void in the market and share innovative technologies plus a commonality of parts, which simplifies maintenance and improves parts costs and accessibility.

Engineered to be compact and light-weight for easy clearance and maximum versatility. The reduced size, generous capacity, and optimized weight distribution ensure maneuverability in tight spaces with small steering angles. Operators may drive in any position, including at full height, providing superior productivity.

The IM Series scissors ensure the maximum capacity in both the platform and on the manual deck extension. They offer traction and stability at maximum height, even with two workers on the fully extended platform.

PRODUCT RANGE

- SERIES IM 4752
- SERIES IM 4746
- SERIES IM 3546
- SERIES IM 3540
- SERIES IM 3230

STANDARD EQUIPMENT

- Electric front wheel drive motors
- Negative electromagnetic parking brakes with electric disengagement
- 90° steering
- Manual deck extension (holds two people)
- Manual emergency lowering device
- Cylinder holding valve
- Heavy duty traction batteries
- Battery charger with automatic switch-off
- Audible motion alarm, horn, hour meter
- Inclinometer with motion cut out and alarms
- Mechanical wheel drive release for emergency hauling
- Cushioned non-marking tires
- Electrical scissor protection
- Pothole protection
- Battery control system with low-voltage cut-out protection
- Fast action foldable railings
- Overload sensor
- CE & EN280 / ANSI 92.20 approved
- AC power to platform
- Flashing beacon
- Proportional controls with diagnostics

UNMATCHED PLATFORM SIZE & EXTENSION

The remarkable size and length of the platform and the extension provides increased performance. Support mutliple workers and tools, extending further than competitive scissor lifts.

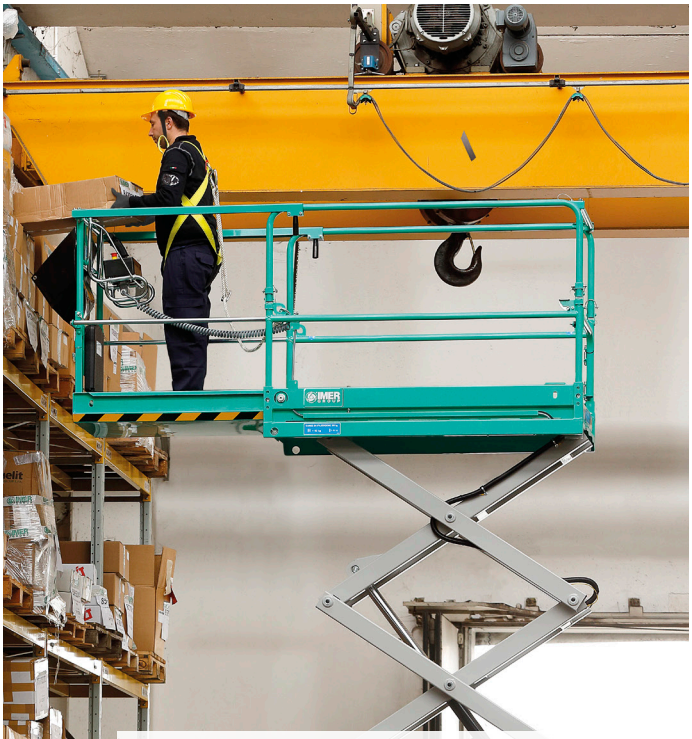

The **SERIES IM** scissor lifts are the ideal solution in the cases requiring:

- **Extended upward and outward reaching**
- **High productivity - multiple workers**
- **Hard-to-reach spaces**
- **Indoor use -** *industrial logistics, maintenance, construction - plumbing, electrical, and hydraulic installation*

PERFORMANCE VERSATILITY

Work and drive safely from any position, including full height. Offering 3 speeds to maximize performance.

CE - EN280 & ANSI A92.20 COMPLIANCE

Every IM Series Scissor Model conforms to the European Standard safety requirements directed by the EN280, and the American National Standards Institute (ANSI) standards - receiving the EN280 marking and ANSI 92.20 approval.

UNMATCHED SAFETY FEATURES

Every IM Series Scissor Model is built for operator safety and includes mutliple safety features such as; an inclinometer with motion cut out and alarms, an overload sensor, a flashing beacon, and a manual emergency lowering device.

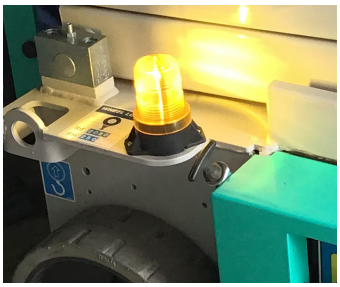

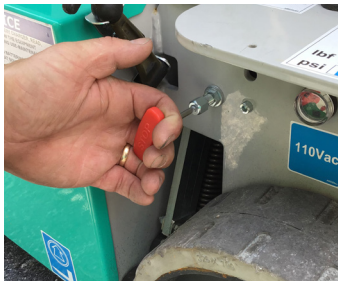

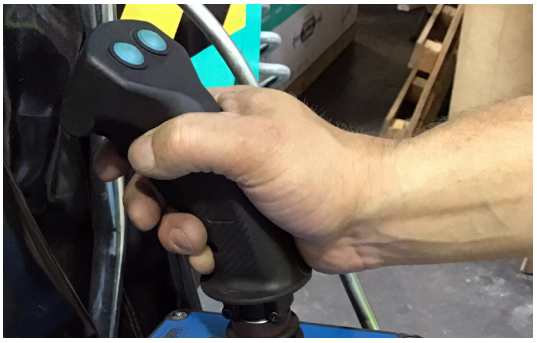

ONE-HAND INTUITIVE CONTROL

Sturdy, simple and intuitive control box on the platform allows for a smooth operation. The control box is also removable for ground control operations.

LONGER RUNTIME

Securely protected high capacity batteries and the electric front-wheel-drive motor boosts your productivity with time - and longer runtimes.

POTHOLE PROTECTION

Every IM Series Scissor Model provides a pothole protective undercarriage to stabilize the scissor and protect the operator. The cushioned non-marking tires continue to roll without interuption over potholes.

SUPERIOR MOBILITY

Narrow platforms and foldable guardrails allow for easy access through standard doorways and narrow aisles.

EXCEPTIONAL ACCESSIBILITY

Designed with full 90° steering capability, to move easily in tight spaces.

FOLDING GUARDRAILS

All IM Series Scissors offer foldable guardrails which allows for transportation and easy access.

NARROW FRAME & PLATFORM

Not only are all IM Series Scissors compact and narrow for maximum mobility, the undercarriages offer a protective metal cover to stop debris from lodging and slowing operation.

ELECTRIC SCISSOR LIFTS

Series IM 47

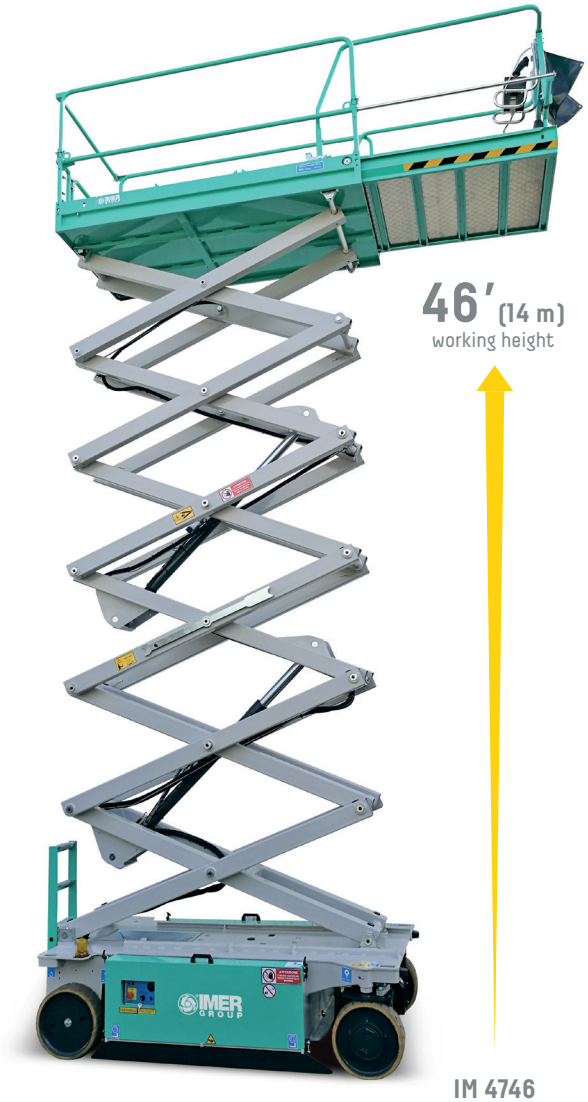

46′ (14 m)
working height

IM 4746

52′ (15.9 m)
working height

IM 4752

Standard AC power
to the platform

Standard cushioned
non-marking tires

OPTIONAL EQUIPMENT

- 120 V cable with plug, socket and safety cut-out
- Gel battery IM 47
- 2° rotating beacon kit

INDOOR USE

New design of the AWP
and the scissor pack

IM 4746

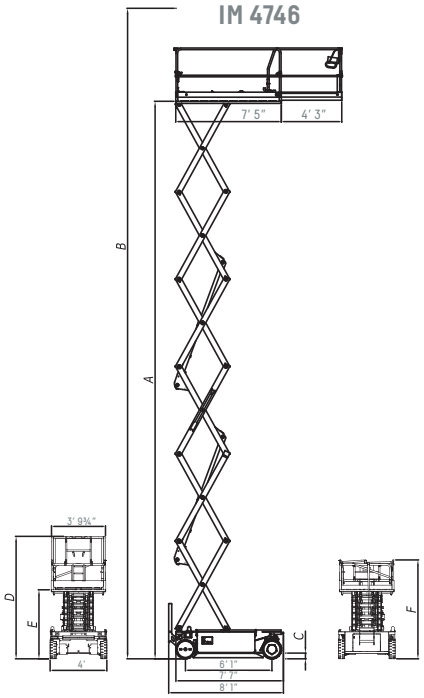

IM 4752

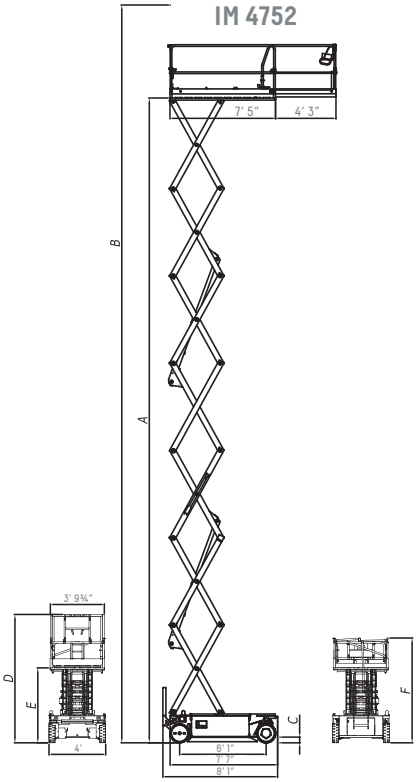

IM 47	IM 4746				IM 4752			
	Metric		US		Metric		US	
Number of scissors	6		6		7		7	
A	mm	12000	ft	39' 4"	mm	13900	ft	45' 7"
B	mm	14000	ft	45' 11"	mm	15900	ft	52' 2"
C (Pot-hole raised/lowered)	mm	120/22	inch	4.72/0.86	mm	120/22	inch	4.72/0.86
D	mm	2619	ft	8' 7"	mm	2746	ft	9
E	mm	1489	ft	4' 10½"	mm	1616	ft	5' 3½"
F	mm	2112	ft	6' 11"	mm	2239	ft	7' 4"
Capacity for indoor use / number of people	kg / #	350 / 3	lb	770 / 2	kg / #	250 / 2	lb	550 / 2
Electric drive motors	V / kW	24 / 3.0	V / HP	24 / 4.0	V / kW	24 / 3.0	V / HP	24 / 4.0
Lifting power pack – hydraulic type	V / kW	24 / 3.0	V / HP	24 / 4.0	V / kW	24 / 4.0	V / HP	24 / 5.3
Lifting / Lowering time (loaded)	sec	68 / 55	sec	68 / 55	sec	68 / 67	sec	68 / 67
Traction battery	V / Ah	24 / 300	V / Ah	24 / 300	V / Ah	24 / 300	V / Ah	24 / 300
Battery weight	kg	4x53	lb	4x117	kg	4 x 53	lb	4x117
Battery charger	V / A	24 / 30A	V / A	24 / 30A	V / A	24 / 30A	V / A	24 / 30A
Oil tank capacity	l	17	gal	4.9	l	17	gal	4.9
Traction speed	km / h	4	mph	2.5	km / h	4	mph	2.5
Safety traction	km / h	0.6	mph	0.4	km / h	0.6	mph	0.4
Gradeability	%	25	%	25	%	25	%	25
Internal steering radius	m	0	inch	0	m	0	inch	0
External steering radius	m	2.35	inch	92½"	m	2.35	inch	92½"
Tire dimensions	mm	410 x 130	inch	16" x 5"	mm	410 x 130	inch	16" x 5"
Tire type	cushion		cushion		cushion		cushion	
Max side/longitudinal tilt angle	degrees	1.8 / 3.0	degrees	1.8 / 3.0	degrees	1.2 / 2.0	degrees	1.2 / 2.0
Total weight	kg	2915	lb	6430	kg	3000	lb	6614

ELECTRIC SCISSOR LIFTS

Series **IM 35**

39′ (12 m)
working height

IM 3540

45′ (14 m)
working height

IM 3546

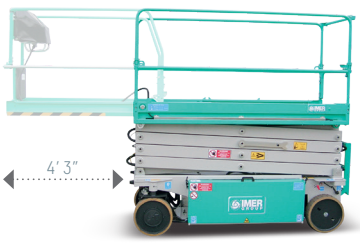

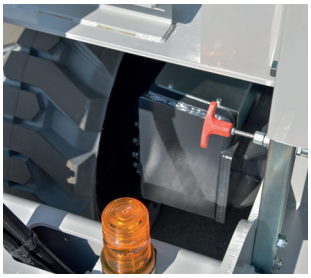

Standard manual emergency lowering device

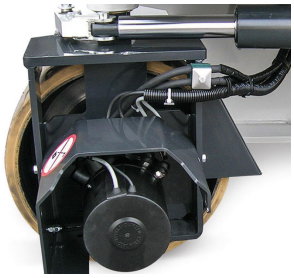

Standard negative electromagnetic parking brakes with electric disengagement

OPTIONAL EQUIPMENT

- 120 V cable with plug, socket and safety cut-out
- Gel battery IM 35 series
- Additional flashing beacon kit
- Compressed air line

INDOOR USE

New design of the chassis which allows easy cleaning and ensures protection to the components

IM 3540

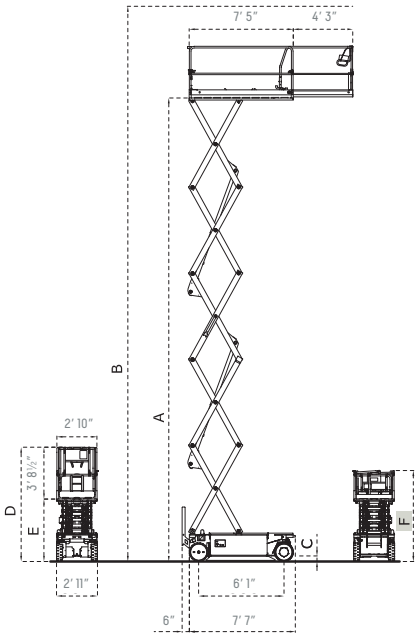

IM 3546

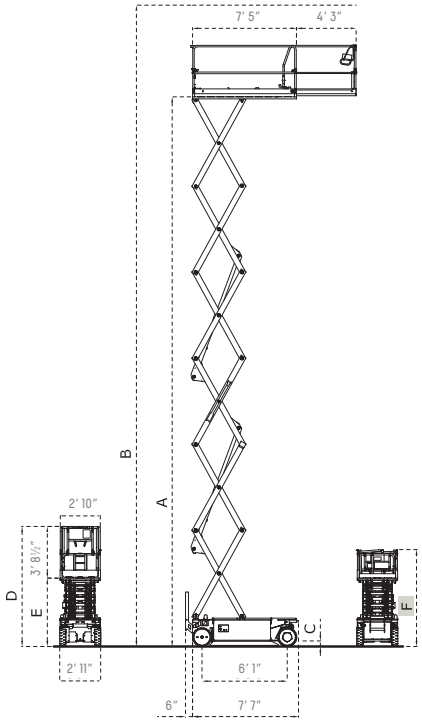

IM 35	IM 3540				IM 3546			
	Metric		US		Metric		US	
Number of scissors	5		5		6		6	
A	mm	10000	ft	32' 9½"	mm	12000	ft	39' 4½"
B	mm	12000	ft	39' 4½"	mm	14000	ft	45' 11"
C (Pot-hole raised/lowered)	mm	123 / 24	inch	4.84 / 0.94	mm	123 / 24	inch	4.84 / 0.94
D	mm	2492	ft	8' 2"	mm	2619	ft	8' 7"
E	mm	1362	ft	4' 5½"	mm	1489	ft	4' 10½"
F	mm	1985	ft	6' 6"	mm	2112	ft	6' 11"
Capacity for indoor use / number of people	kg / #	300 / 3	lb	660 / 3	kg / #	230 / 2	lb	510 / 2
Electric drive motors	V / kW	24 / 3.0	V / HP	24 / 4.0	V / kW	24 / 3.0	V / HP	24 / 4.0
Lifting power pack – hydraulic type	V / kW	24 / 3.0	V / HP	24 / 4.0	V / kW	24 / 4.0	V / HP	24 / 5.3
Lifting / Lowering time (loaded)	sec	70 / 45	sec	70 / 45	sec	73 / 55	sec	73 / 55
Traction battery	V / Ah	24 / 250	V / Ah	24 / 250	V / Ah	24 / 300	V / Ah	24 / 300
Battery weight	kg	4x45	lb	4x99	kg	4 x 53	lb	4x117
Battery charger	V / A	24 / 30A	V / A	24 / 30A	V / A	24 / 30A	V / A	24 / 30A
Oil tank capacity	l	17	gal	4.9	l	17	gal	4.9
Traction speed	km / h	4	mph	2.5	km / h	4	mph	2.5
Safety traction	km / h	0.6	mph	0.4	km / h	0.6	mph	0.4
Gradeability	%	25	%	25	%	25	%	25
Internal steering radius	m	0	inch	0	m	0	inch	0
External steering radius	m	2.22	inch	7' 2½"	m	2.22	inch	7' 2½"
Wheel dimensions	mm	410 x 130	inch	16" x 5"	mm	410 x 130	inch	16" x 5"
Wheel type	cushion		cushion		cushion		cushion	
Max side/longitudinal tilt angle	degrees	1.5 / 2.5	degrees	1.5 / 2.5	degrees	1.2 / 2.5	degrees	1.2 / 2.5
Total weight	kg	2835	lb	6250	kg	3225	lb	7110

ELECTRIC SCISSOR LIFTS

Series IM 32

STANDARD EQUIPMENT

- Electric traction on the front wheels
- Negative electromagnetic parking brakes with electric disengagement
- 90° wheel steering
- Manual deck extension of 39½"
- Manual emergency lowering
- Non-return valve on lifting cylinders
- Traction batteries 24V-185Ah (c5)
- Battery charger with automatic cut-off
- All movement alarm, horn, hour meter
- Inclinometer with motion cut-out and alarm
- Mechanical release for emergency hauling
- Solid rubber non-marking tires
- Electric scissor protection
- Pot Hole protection
- Battery level control with low voltage protection
- Foldable guardrails
- Overload sensor
- CE & EN280 / ANSI 92.20 approved
- AC power to platform
- Flashing beacon
- Proportional controls with diagnostics

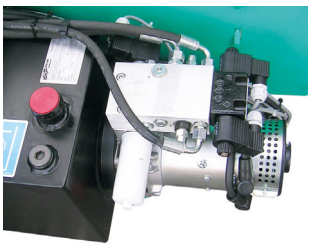

Standard hydraulic power pack

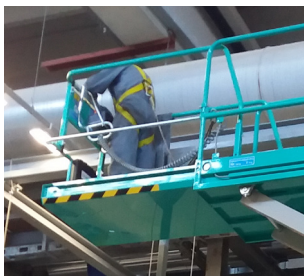

Manual deck extension of 39½"

OPTIONAL EQUIPMENT

- 120 V cable with plug, socket and safety cut-out
- Kit for additional flashing beacon
- Compressed air line at the platform
- Gel battery IM 32 series

INDOOR USE

Foldable guardrails allow for easy access through standard doorways

Manual deck extension of 39-1/2”provides extra reach and work space for two people

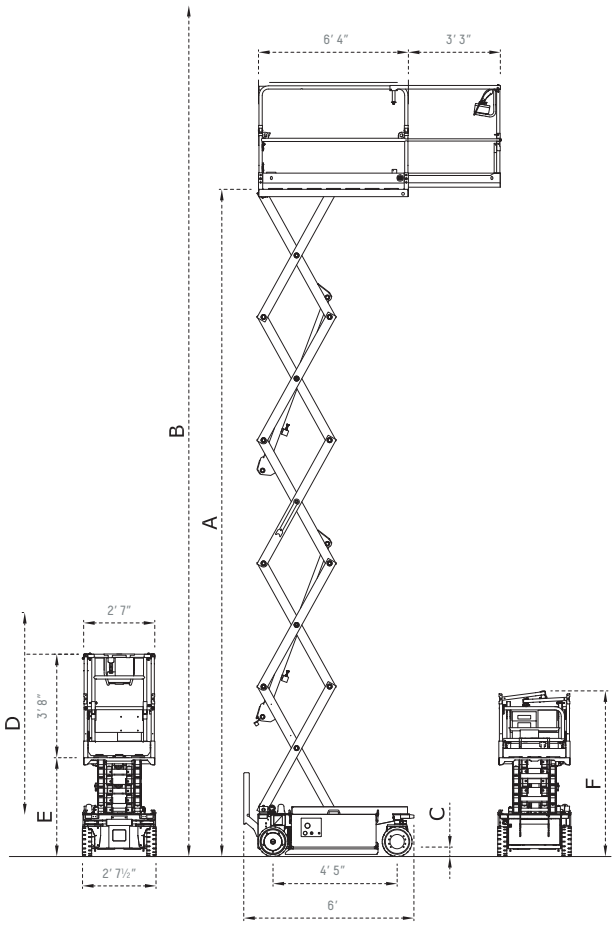

IM 32	IM 3230			
	Metric		US	
Number of scissors	5		5	
A	mm	7200	ft	23' 7½"
B	mm	9200	ft	30' 2"
C (Pot-hole raised/lowered)	mm	90/22	inch	3.54" / 0.87"
D	mm	2200	ft	7' 2½"
E	mm	1080	ft	3' 6"
F	mm	1800	ft	5' 11"
Capacity for indoor use / number of people	kg / #	231/2	lb	510/2
Electric drive motors	V / kW	24/2.4	V / HP	24/3.2
Lifting power pack – hydraulic type	V / kW	24/2.1	V / HP	24/2.8
Lifting / Lowering time (loaded)	sec	36/35	sec	36/35
Traction battery	V / Ah	24/185	V / Ah	24/185
Battery weight	kg	4x28	lb	4x62
Battery charger	V / A	24/20A	V / A	24/20A
Oil tank capacity	l	7	gal	1.84
Traction speed	km / h	4	mp / h	2.5
Safety traction	km / h	0.6	mp / h	0.4
Gradeability	%	25	%	25
Internal steering radius	m	0	ft	0
External steering radius	m	1.7	ft	5' 7"
Wheel dimensions	mm	325 x 100	inch	13" x 4"
Wheel type	cushion		cushion	
Max side/longitudinal tilt angle	degrees	1.5 / 2.5	degrees	1.5 / 2.5
Total weight	kg	1835	lb	4050

TRACK DRIVEN

SERIES IM R ARTICULATED & TELESCOPIC LIFTS

IMER was one of the first companies to introduce tracked aerial units to the international market years ago.

In compliance with strict European safety standards, the IM R Series was engineered with safety features that far exceeded Western regulations of that time.

Today, with an increased focus on US safety codes, IMER is introducing two models to the North American marketplace that were engineered and built in compliance with European and US safety standards.

While the IM R Series was first engineered with safety in mind, user experience, maneuverability, and versatility were also a priority.

The IM R Series is an easy to operate, compact and light-weight solution for maximum clearance and versatility. The reduced size of the units and portable remote controls ensure maneuverability in tight spaces while providing added operator safety. In additon, track-driven capabilities offer maximum versatility for both outdoor and indoor applications.

Like IMER's scissor lift series, the IM R 19 and IM R 13 T share innovative technologies and a commonality of parts, which simplifies maintenance and improves parts costs and accessibility.

PRODUCT RANGE

- SERIES IM R 19
- SERIES IM R 13 T

STANDARD EQUIPMENT

- Automatic outrigger leveling system
- 360° rotation (not continuous)
- Emergency hand pump
- Cylinder holding valve
- Hour meter
- Load and tip detection sensor
- Load cell
- Hydraulic jib
- Rubber tracks
- Electric motor for indoor use
- Air / Water outlet in the platform basket
- AC power to platform
- Removable wired control box
- Three travel speeds
- Wired control
- Remote battery charger
- Removable basket with 1 pin detach
- Overload sensor
- 120V battery charger
- Proportional controls with diagnostics
- GX390 Honda Engine
- Hydraulically adjustable track width *(IM R 19 Only)*

UNMATCHED ACCESSIBILITY

The IM R tracked Series allows you to go where no towable lift can go and easily access those hard-to-reach areas. With a remarkable extension height, side outreach and 360° rotation, the IM R Series offers unmatched accessibility as well.

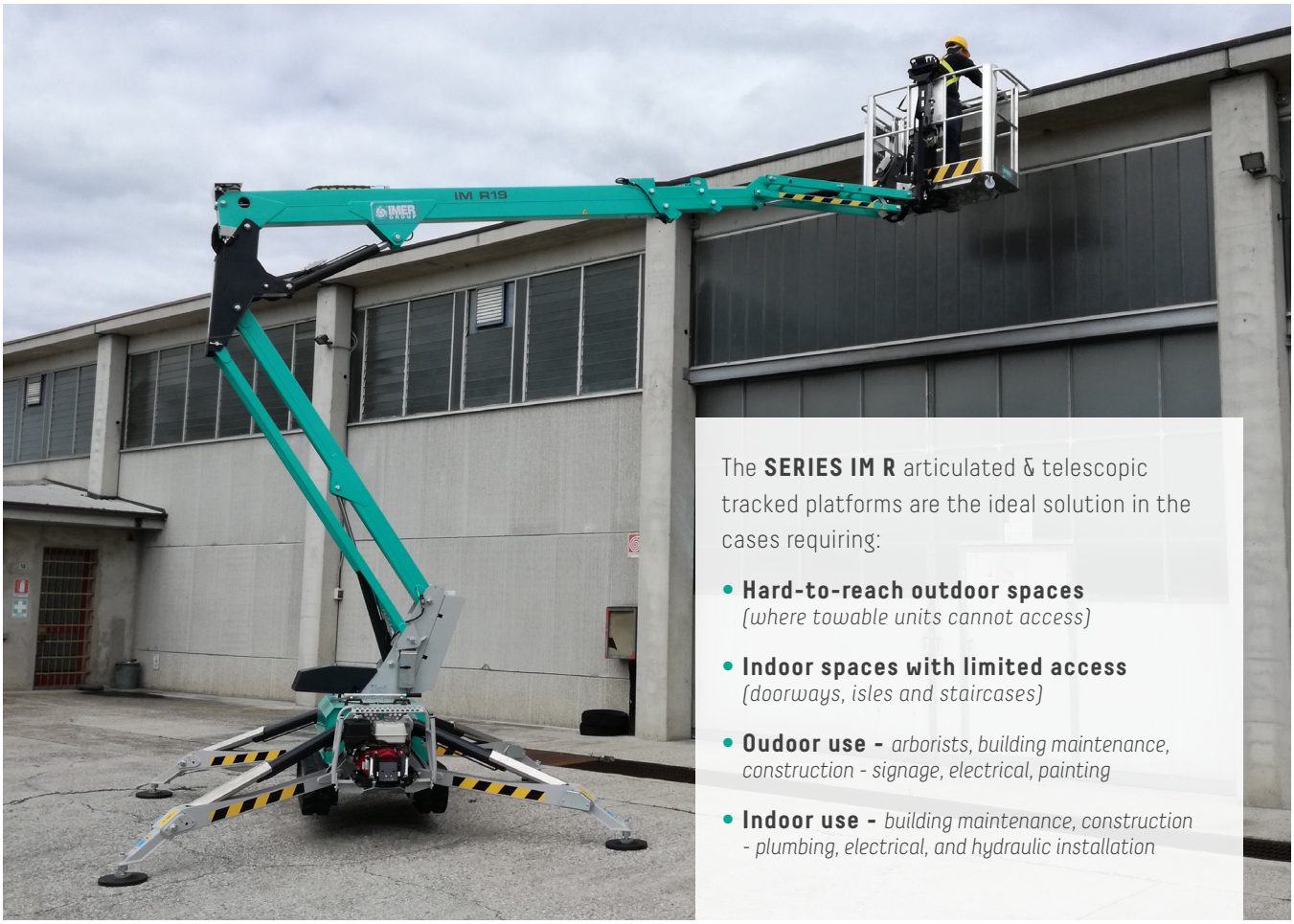

The **SERIES IM R** articulated & telescopic tracked platforms are the ideal solution in the cases requiring:

- **Hard-to-reach outdoor spaces** *(where towable units cannot access)*
- **Indoor spaces with limited access** *(doorways, isles and staircases)*
- **Oudoor use -** *arborists, building maintenance, construction - signage, electrical, painting*
- **Indoor use -** *building maintenance, construction - plumbing, electrical, and hydraulic installation*

FAST & SECURE LEVELING

Automatic outrigger leveling system for quick set up and peace of mind.

EASY USER EXPERIENCE

A user-friendly control panel. The easily removable remote controlled unit allows for more space available in the basket and navigating from the ground.

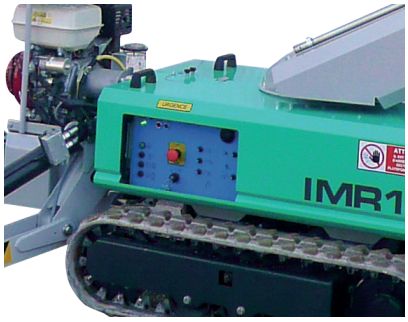

EASY ACCESS

In additon to the removeable control box in the basket, the IM R Series includes an easy to access ground control panel.

ATRIUM LIFT

Series IM R 19

STANDARD EQUIPMENT

- Automatic outrigger leveling system
- 360° rotation (not continuous)
- Emergency hand pump
- Cylinder holding valve
- Hour meter
- Load and tip detection sensor
- Load cell
- Hydraulic jib
- Rubber tracks
- Electric motor for indoor use
- Air / Water outlet in the platform basket
- AC power to platform
- Removable wired control box
- Three travel speeds
- Wired control
- Remote battery charger
- Removable basket with 1 pin detach
- Overload sensor
- 120V battery charger
- Proportional controls with diagnostics
- GX390 Honda Engine
- Hydraulically adjustable track width
- 12 V emergency pump
- Oversized 14" outrigger pads
- Wireless radio remote control box

OPTIONAL EQUIPMENT

- Non-marking rubber tracks
- Working light in the platform basket

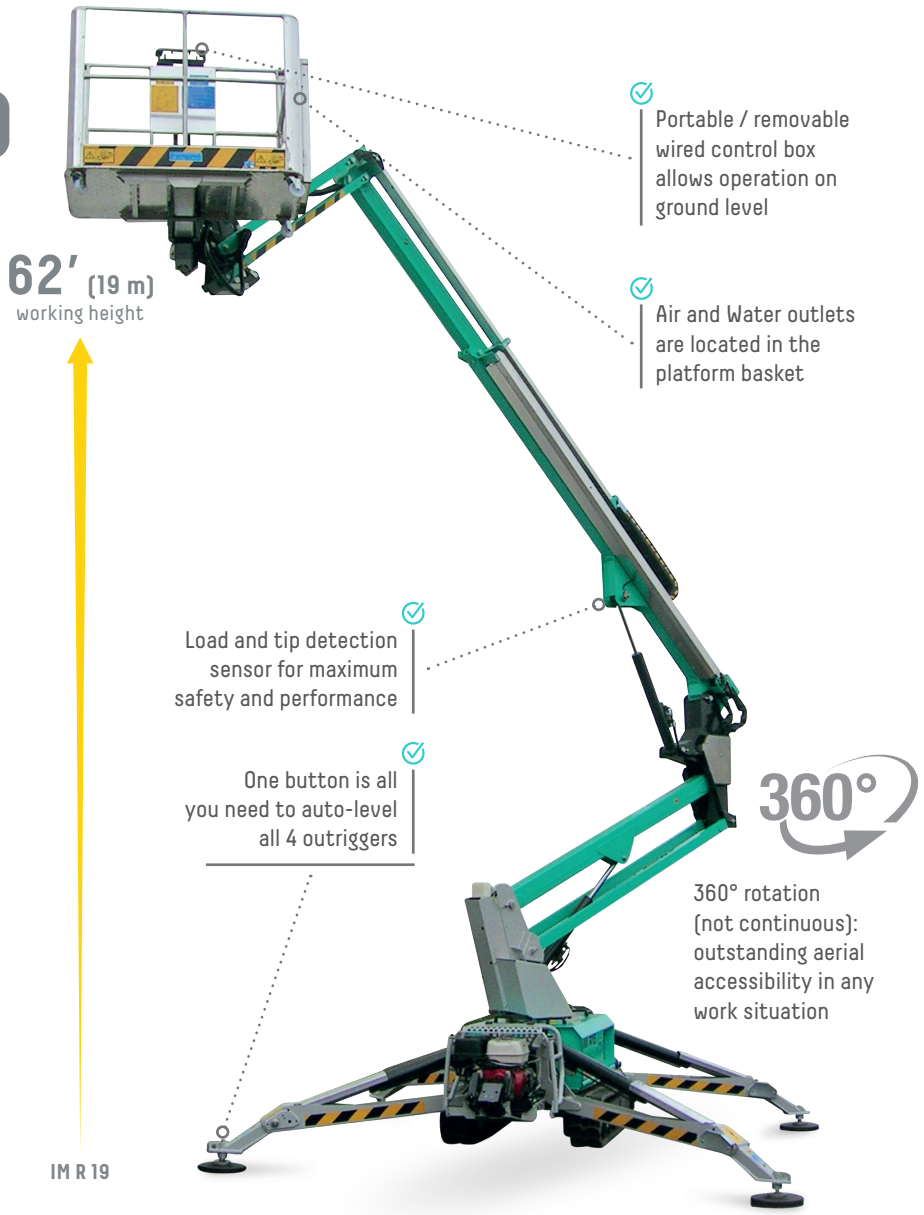

	IM R 19			
		Metric		US
Working height	m	19	ft	62
Platform height	m	17	ft	56
Side outreach	m / kg	9.75 / 80 - 8.5 / 120 - 7 / 227	ft / lb	32' / 176 - 28' / 310 - 23' / 510
Rotation (not continuous)	deg	360°	deg	360°
Basket dimensions	mm	1448 x 711 x 1092	in	57" x 28" x 43"
Basket rotation	deg	124°	deg	124°
Transport length (without basket)	mm	5308 / 4622	ft	17' 5" / 15' 2"
Transport width (without basket)	mm	Min 787 / Max 1066	ft	Min 2' 7" / Max 3' 6"
Height in stowed position (w/ stabilizers in position)	mm	Min 1981 / Max 2108	ft	Min 6' 6" / Max 6' 11"
Overall outrigger footprint	mm	2896 x 2946	ft	9' 6" x 9' 8"
Stabilizer Load	daN	1750	ft-lb	3930
Driving speed	km / h	0 - 2	mph	0 - 1.24
Gradeability	%	32	%	32
Electric pump	V / kW	120 / 1.125	V / HP	120 / 1.5
Max. hydraulic pressure	bar	220	psi	3190
Battery	V/Ah	12	V/Ah	12
Battery charger	V/A	12 / 12	V/A	12 / 12
Gas motor		Honda GX390 - 11 HP 3600 rpm		Honda GX390 - 11 HP 3600 rpm
Machine Weight	kg	2435	lb	5370

OUTDOOR AND INDOOR USE

Standard emergency hand pump with ease of access and operation.

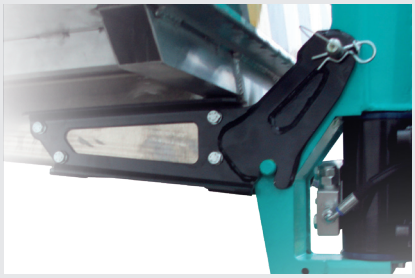

Easily attach or remove the basket with the one-pin mounting system.

Hydraulically adjust the track width for added stability and traction.

The compact dimensions allow you to take the IM R19 almost anywhere!

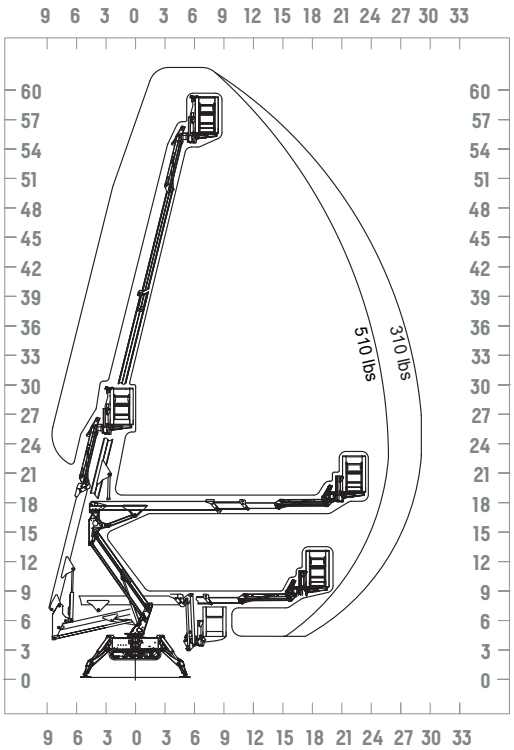

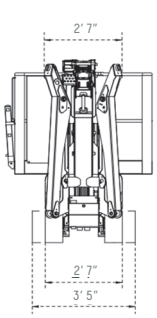

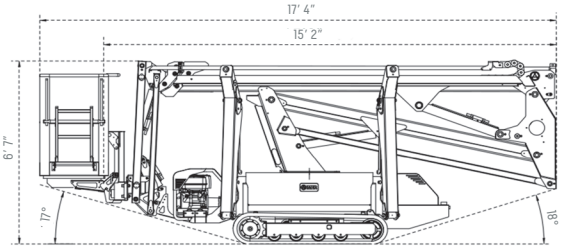

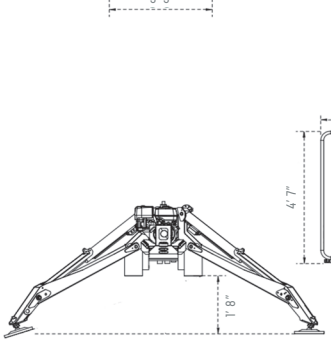

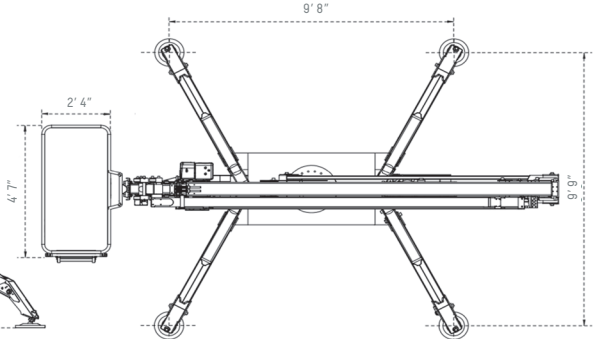

ATRIUM LIFT

Series IM R 13 T

STANDARD EQUIPMENT

- Automatic outrigger leveling system
- 360° rotation (not continuous)
- Emergency hand pump
- Cylinder holding valve
- Hour meter
- Load and tip detection sensor
- Load cell
- Hydraulic jib
- Rubber tracks
- Electric motor for indoor use
- Air / Water outlet in the platform basket
- AC power to platform
- Removable wired control box
- Three travel speeds
- Wired control
- Remote battery charger
- Removable basket with 1 pin detach
- Overload sensor
- 120V battery charger
- Proportional controls with diagnostics
- GX390 Honda Engine

OPTIONAL EQUIPMENT

- 12 V emergency pump
- Hydraulically adjustable tracks
- Non-marking rubber tracks
- Wireless radio remote control box
- Working light in the platform basket

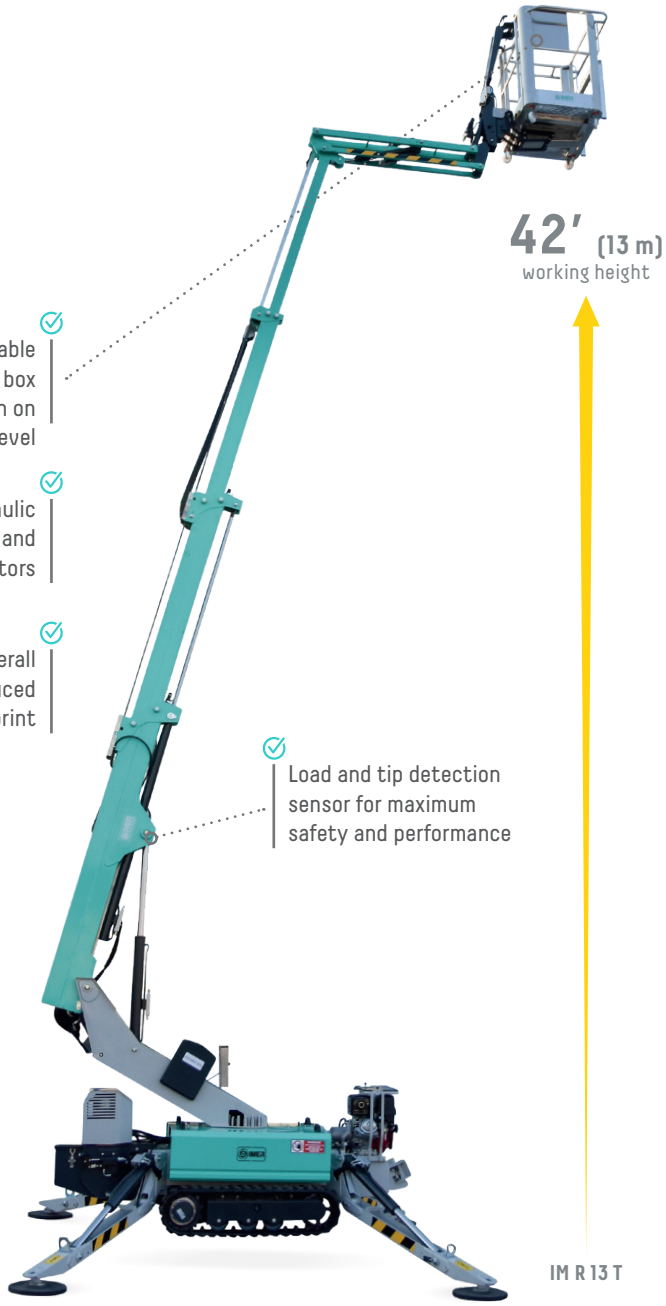

OUTDOOR AND INDOOR USE

		IM R 13 T		
		Metric		US
Working height	m	13	ft	42′ 6″
Platform height	m	11	ft	36′
Side outreach	m / kg	5.25 / 230 – 6.3 / 140	ft / lb	17′ / 510 - 20′ 6″ / 308
Rotation (not continuous)	deg	360°	deg	360°
Basket dimensions	mm	1300 x 750 x 1100	in	51″ x 28″ x 43″
Transport length (without basket)	mm	3780 / 3000	ft	12′ 4″ / 9′ 8″
Transport width (without basket)	mm	1300 / 790	ft	4′ 6″ / 2′ 6″
Height in stowed position (w/ stabilizers in position)	mm	2000	ft	6′ 6¾″
Overall outrigger footprint	mm	2700 x 2800	ft	8′ 8″ / 9′ 2″
Driving speed	km/h	1.5	mph	.93
Gradeability	deg / %	17° (30%)	%	17° (30%)
Platform capacity	kg	230	lb	510
Electric motor	V / kW	230 / 2.2	V / HP	230 / 2.95
Gas motor		Honda GX390 - 11 HP 3600 rpm		Honda GX390 - 11 HP 3600 rpm
Total weight of the machine	kg	1495*	lb	3296

*1550 kg / 3417 lbs with hydraulically adjustable tracks

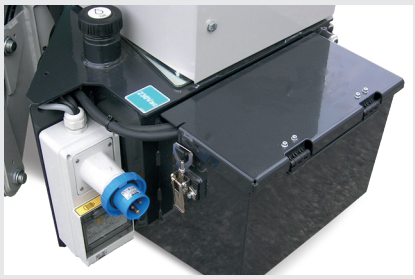

Thermal-magnetic switch panel and power line inlet.

IM R 13 T compact jib assembly hosting both the load sensor and basket rotation system.

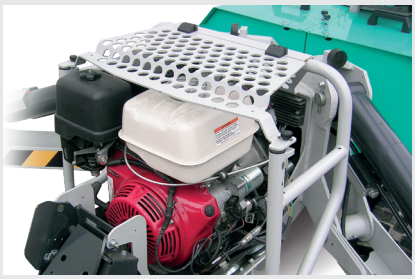

Rugged engine guard for improved protection.

Compact dimensions for enhanced accessibility in any working site.

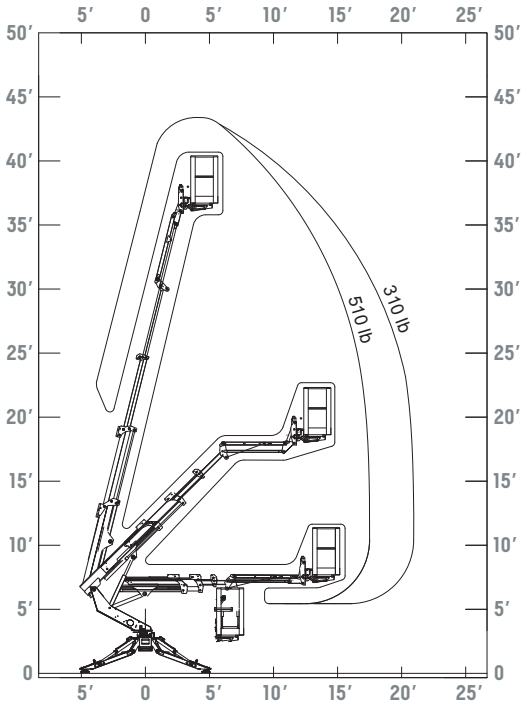

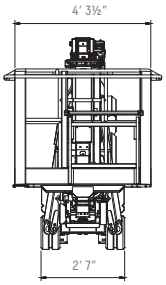

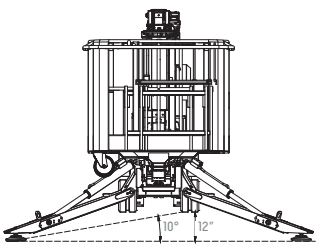

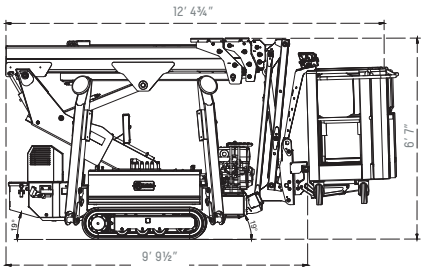

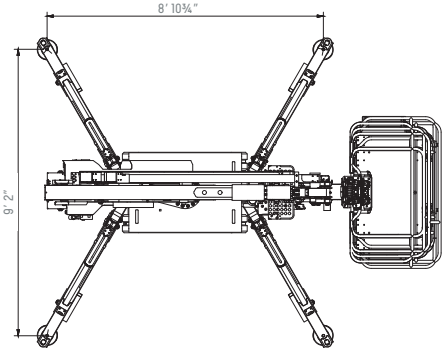

IMER-GROUP-P-A-LIFTS-20190711-USA

TOLL FREE: **800.275.5463**
WWW.IMERUSA.COM

DISTRIBUTION UNIForce

IMER GROUP
TOGETHER **WE BUILD**

IMER USA, Inc.
221 West Hampton Place
Capitol Heights, MD 20743
Tel. 866-889-1272

IPAF.org